LNG

TANKS AND EQUIPMENT

FOR PRESSURIZED LIQUEFIED GASES AT CRYOGENIC TEMPERATURE

- STATIC TANKS
- TANKS FOR SERVICE STATIONS
- ISO-CONTAINERS
- SKIDS
- TANKERS FOR TRANSPORT

lapesa

lapesa
since 1964
ISO 9001
BUREAU VERITAS
Certification
BUREAU VERITAS
1828
guarantee of quality

Tanks for LNG

Engineering, development and manufacture of tanks for your projects of pressurized liquefied natural gas at cryogenic temperature.

lapesa Solutions

lapesa

LNG

Tanks designed for different working pressures, from 5 to 40 bar!

INDEX

PAGE

STATIC TANKS FOR LNG STORAGE

- 2200 H - HORIZONTAL SERIES 8
- 2300 H - HORIZONTAL SERIES 10
- 3800 H - HORIZONTAL SERIES 12
- 4200 H - HORIZONTAL SERIES 14
- 2200 V - VERTICAL SERIES 16
- 3000 V - VERTICAL SERIES 18
- 3800 V - VERTICAL SERIES 20
- 4200 V - VERTICAL SERIES 22

LNG TANKS FOR SERVICE STATIONS

- SPECIFIC LNG TANKS FOR SERVICE STATIONS 24

ISO-CONTAINERS FOR THE TRANSPORT OF LNG

- LTCC43 ISO CONTAINER 26

LNG SKIDS

- LCUA 1000 V LNG SKID 28

LNG TANKERS

- LTC58 TANKER FOR LNG TRANSPORT AND SUPPLY 30

CRYOGENIC TANKS FOR **LNG**

Double-wall liquefied natural gas storage tanks with vacuum insulation, comprising two concentric tanks, an inner tank in austenitic stainless steel and an outer tank in carbon steel, protected against weathering by special anti-rust surface treatment.

The chamber between the two concentric tanks is filled with a material with a high insulating capacity and hygroscopic material is also added. A vacuum (< 5*10 -2 mbar) is then made in the chamber and this together provides the thermal insulation for the tank.

Lapesa standard tanks have capacities ranging from 5 to 240 m^3, for horizontal and vertical installation and with working pressures from 5 to 40 bar depending on the model, and design temperatures of -196 +50ºC.

Our tanks are designed and manufactured according to European Directive 2014/68/EU or, upon request, to ASME VIII, div.1. They undergo checking and testing during the manufacturing process in line with Lapesa's internal quality standards and EN ISO 9001 certification as well as being supervised by independent quality entities.

All of our cryogenic tanks are supplied with the valve fittings mounted, including a PBU pressure build up unit that maintains the tank's operating pressure in normal working conditions.

This document describes the standard equipment that is supplied with the tanks and the optional fittings available if needed to meet specific project requirements.

Static tanks specifically for LNG service stations, tankers for LNG transport, handling and service, LNG skids and ISO-containers for maritime and land transport of LNG complete the range of CRYOGENIC TANKS AND EQUIPMENT described in this catalogue.

QUALITY IN CRYOGENIC TANKS FOR **LNG**

Quality management and planning together with inspections throughout the whole of the manufacturing process of **lapesa** products is an essential part our corporate strategy and a responsibility that is taken on at all levels of the company. Our permanent objective is centred on continually improving the efficiency of our quality management in order to achieve the highest standards of quality in all of our products.

lapesa boasts **ISO 9001 quality certification** since 1993, and manufactures its products in accordance with the European standards and directives on the manufacture of pressurized vessels in general and specifically that referring to tanks for gases at cryogenic temperature, with **EC marking.**

ISO 9001
BUREAU VERITAS
Certification

Also in compliance with **US ASME VIII, div.1, standards** and **"U"marking** (ASME stamp).

lapesa reserves the right to carry out technical changes without prior notice.

STATIC TANKS FOR **LNG** STORAGE

HORIZONTAL CRYOGENIC TANKS FOR LIQUEFIED NATURAL GAS

2200 H SERIES

2200 H SERIES

Designation example "LC6H22-P05": **LC**: lapesa cryogenic tank, **6**: vnominal volume 6 m³, **H**: horizontal installation, **22**: diameter 2,200 mm, **P05**: maximum working pressure 5 bar

MAIN FEATURES		LC5H22-P..*	LC6H22-P..*	LC11H22-P..*	LC16H22-P..*	LC20H22-P..*
NOMINAL VOLUME	m³	5,0	6,0	11,0	16,0	20,0
NET VOLUME	m³	4,9	6,2	10,9	15,7	19,9
MAXIMUM WORKING PRESSURE	bar	*(P) : 05, 10, 13, 16, 22, 28, 35				
DESIGN TEMPERATURE	°C	-196	-196	-196	-196	-196
STANDARDS		EC marking: European directive 2014/68/EU, (optional) ASME stamp: ASME VIII, div.1				
INNER TANK	material	austenitic stainless steel				
OUTER TANK	material	carbon steel				
INSULATION		Perlite insulating material, vacuum < 5 * 10 $^{-2}$				
INTERNAL FINISH		Particle free				
EXTERNAL FINISH		SA 2 1/2 blasting/ 60 micron polyamide epoxy primer / 60 micron white polyurethane finish				

TECHNICAL DETAILS		LC5H22-P..*	LC6H22-P..*	LC11H22-P..*	LC16H22-P..*	LC20H22-P..*
LNG USEFUL CAPACITY (95%, 1 bar)	mt	2,2	2,7	4,8	6,9	8,7
PRESSURE BUILD UP UNIT (PBU) CAPACITY (for NG consumption at 3 bar)[1]	Nm³/h	400	400	400	400	400

(1) Please consult us for other flow and/or pressure requirements.

EQUIPMENT INCLUDED

- **Vent pipe with flame arrester:** directional.
- **Vacuum gauge sensor.**
- **Standard filling connection:** ND50.
- **Electronic level indicator** (with pressure and liquid level transmitter): SAMSON.
- **Regulator and economiser valves:** CASH, SAMSON, HEROSE
- **Pressure build up unit** (PBU).
- **Safety valve block:** HEROSE, CAEN.
- **General valves:** HEROSE, CAEN, BESTOBELL.

OPTIONAL EQUIPMENT

- **External economiser kit** with pressure regulator, filter and shut-off valve.
- **Internal economiser:** ND20.
- **Pressure build up unit:** PBU/ other capacities.
- **Level indicator:** mechanical.
- **Fittings/valves:** other makes.
- **Valves pneumatically driven.**
- **Double Filling valve**
- **High point:** double.

lapesa reserves the right to carry out technical changes without prior notice.

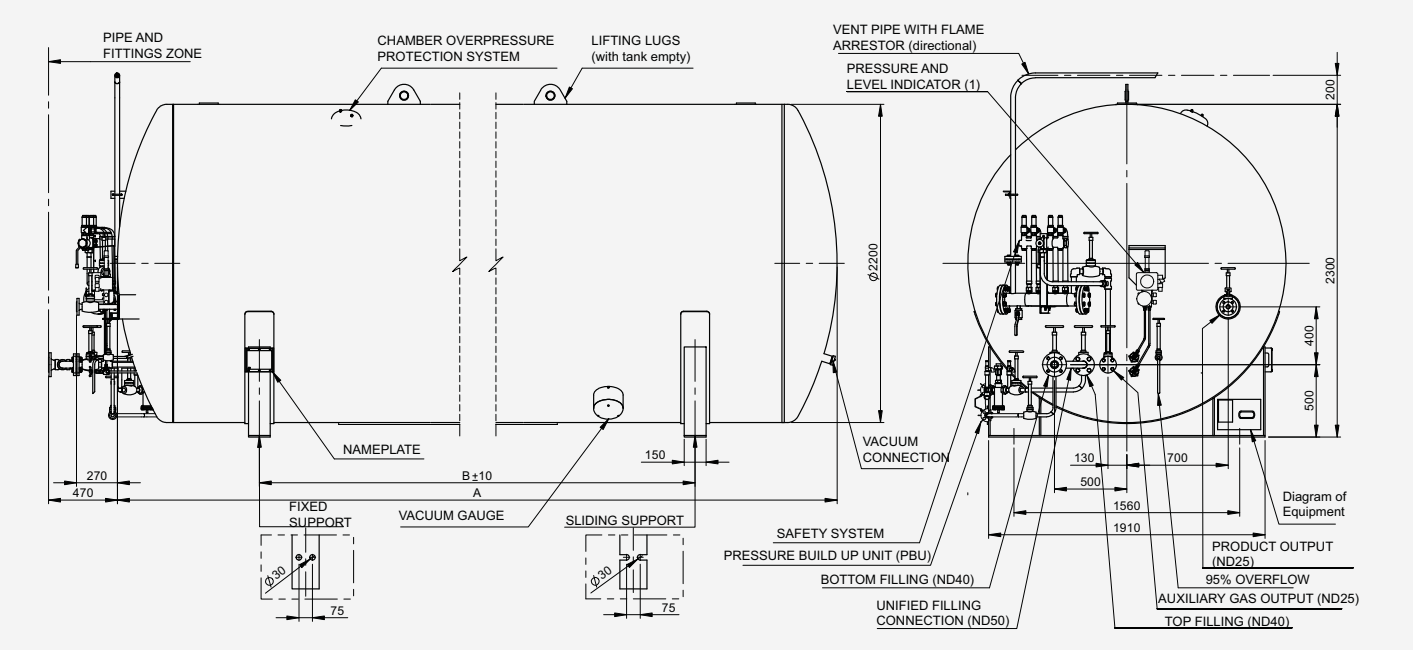

DETAILS FOR HANDLING AND TRANSPORT			LC5H22-P..*	LC6H22-P..*	LC11H22-P..*	LC16H22-P..*	LC20H22-P..*
Approx. tare when empty (tank with full equipment)	mt	P05	2,9	3,3	4,6	5,9	7,1
		P10	2,9	3,3	4,6	5,9	7,1
		P13	3,0	3,4	4,8	6,1	7,5
		P16	3,1	3,5	5,0	6,4	7,8
		P22	3,5	3,9	5,6	7,2	8,7
		P28	3,7	4,2	6,1	7,8	9,5
		P35	4,0	4,5	6,5	8,4	10,3
L: total length including valves	mm		3.525	4.065	6.065	8.065	9.845
D: total width	mm		2.200	2.200	2.200	2.200	2.200
H: total height including vent pipe	mm		2.450	2.450	2.450	2.450	2.450
P: distance between supports	mm		1.000	1.500	3.500	5.500	7.300

VG	Gas phase filling valve
VL	Liquid phase filling valve
VC	Consumption valve
VR	Overflow valve
PPR	Pressure Build up Unit (PBU)
VEP	Input valve PBU
VSP	Output valve PBU
RP	Pressure regulator
F	Filter
VAG	Auxiliary valve – Gas phase
IN	Level
IP	Manometer
vn	Level gate valve
re	By-pass valve
ri	Bottom level valve
rs	Top level valve
TP	Pressure transmitter (according to model)
TN	Level transmitter (according to model)
CS	3-way valve (safety)
VS	Safety valve
SL	Line safety valve
VA	Pressure relief valve
Pe	Casing safety device
Tv	Vacuum connection
Mv	Vacuum gauge device

SCHEMATIC DIAGRAM
2200 H SERIES

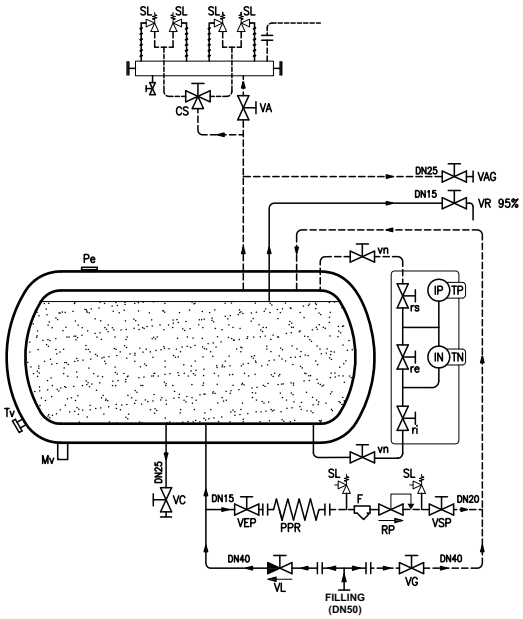

STATIC TANKS FOR LNG STORAGE

HORIZONTAL CRYOGENIC TANKS FOR LIQUEFIED NATURAL GAS

3000 H SERIES

3000 H SERIES

Designation example "LC20H30-P16": **LC**: lapesa cryogenic tank, **20**: nominal volume 20 m³, **H**: horizontal installation, **30**: diameter 3,000 mm, **P16**: maximum working pressure 16 bar

MAIN FEATURES		LC20H30-P..*	LC30H30-P..*	LC40H30-P..*	LC50H30-P..*	LC60H30-P..*	LC80H30-P..*
NOMINAL VOLUME	m³	20,0	30,0	40,0	50,0	60,0	80,0
NET VOLUME	m³	19	30,6	39,9	49,9	59,8	79,2
MAXIMUM WORKING PRESSURE	bar	*(P) : 05, 10, 16, 20, 24, 30, 38					
DESIGN TEMPERATURE	°C	-196	-196	-196	-196	-196	-196
STANDARDS		EC marking: European directive 2014/68/EU, (optional) ASME stamp: ASME VIII, div.1					
INNER TANK	material	austenitic stainless steel					
OUTER TANK	material	carbon steel					
INSULATION		Perlite insulating material, vacuum < 5 * 10 -²					
INTERNAL FINISH		Particle free					
EXTERNAL FINISH		SA 2 1/2 blasting/ 60 micron polyamide epoxy primer / 60 micron white polyurethane finish					

TECHNICAL DETAILS		LC20H30-P..*	LC30H30-P..*	LC40H30-P..*	LC50H30-P..*	LC60H30-P..*	LC80H30-P..*
LNG USEFUL CAPACITY (95%, 1 bar)	mt	8,3	13,4	17,4	21,8	26,1	34,6
PRESSURE BUILD UP UNIT (PBU) CAPACITY (for NG consumption at 3 bar)[1]	Nm³/h	1.000	1.000	1.000	1.000	1.000	1.000

(1) Please consult us for other flow and/or pressure requirements.

EQUIPMENT INCLUDED

- **Vent pipe with flame arrester:** directional.
- **Vacuum gauge sensor.**
- **Standard filling connection:** ND50.
- **Electronic level indicator** (with pressure and liquid level transmitter): SAMSON.
- **Regulator and economiser valves:** CASH, SAMSON, HEROSE
- **Pressure build up unit** (PBU).
- **Safety valve block:** HEROSE, CAEN.
- **General valves:** HEROSE, CAEN, BESTOBELL.

OPTIONAL EQUIPMENT

- **External economiser kit** with pressure regulator, filter and shut-off valve.
- **Internal economiser:** ND20.
- **Pressure build up unit:** PBU/ other capacities.
- **Level indicator:** mechanical.
- **Fittings/valves:** other makes.
- **Valves pneumatically driven.**
- **Double Filling valve**
- **High point:** double.

lapesa reserves the right to carry out technical changes without prior notice.

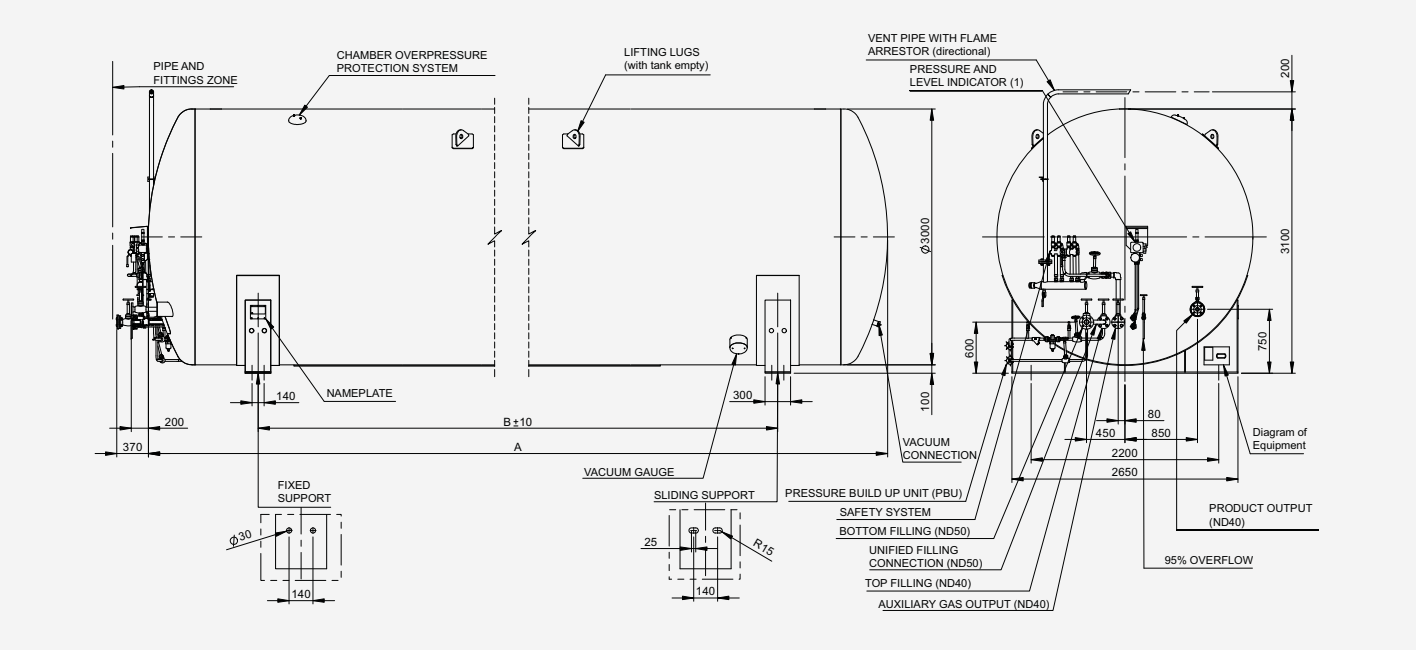

DETAILS FOR HANDLING AND TRANSPORT			LC20H30-P..*	LC30H30-P..*	LC40H30-P..*	LC50H30-P..*	LC60H30-P..*	LC80H30-P..*
Approx. tare when empty (tank with full equipment)	mt	P05	9,3	10,5	12,9	15,4	17,6	22,4
		P10	9,3	10,5	12,9	15,4	17,6	22,4
		P16	10,3	11,7	14,4	17,1	19,5	24,9
		P20	11,0	12,6	15,6	18,5	21,2	27,0
		P24	11,7	13,6	16,7	19,9	22,9	29,2
		P30	12,6	14,9	18,4	21,9	25,3	32,1
		P38	13,7	16,4	20,3	24,2	27,9	35,7
L: total length including valves	mm		5.384	7.744	9.744	11.744	13.744	17.744
D: total width	mm		3.000	3.000	3.000	3.000	3.000	3.000
H: total height (vent pipe disassembled)	mm		3.100	3.100	3.100	3.100	3.100	3.100
P: distance between supports	mm		2.400	4.800	6.800	8.800	10.800	14.800

VG	Gas phase filling valve
VL	Liquid phase filling valve
VC	Consumption valve
VR	Overflow valve
PPR	Pressure Build up Unit (PBU)
VEP	Input valve PBU
VSP	Output valve PBU
RP	Pressure regulator
F	Filter
VE	Economiser valve
VEE	Economiser Input Valve
VAS	Economiser Output Valve
VAG	Auxiliary valve – Gas phase
IN	Level
IP	Manometer
vn	Level gate valve
re	By-pass valve
ri	Bottom level valve
rs	Top level valve
TP	Pressure transmitter (according to model)
TN	Level transmitter (according to model)
CS	3-way valve (safety)
VS	Safety valve
SL	Line safety valve
VA	Pressure relief valve
Pe	Casing safety device
Tv	Vacuum connection
Mv	Vacuum gauge device

SCHEMATIC DIAGRAM
(EXAMPLE WITH INTERNAL ECONOMIZER)
3000 H SERIES

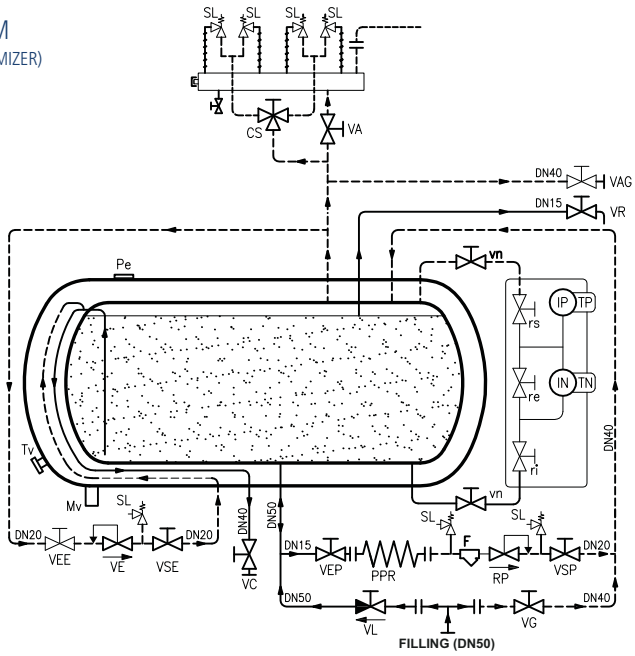

STATIC TANKS FOR LNG STORAGE

HORIZONTAL CRYOGENIC TANKS FOR LIQUEFIED NATURAL GAS

3800 H SERIES

3800 H SERIES

Designation example "LC80H38-P16": **LC**: lapesa cryogenic tank, **80**: nominal volume 80 m³, **H**: horizontal installation **38**: diameter 3,000 mm, **P16**: maximum working pressure 16 bar

MAIN FEATURES		LC80H38-P..*	LC107H38-P..*	LC120H38-P..*	LC150H38-P..*	LC200H38-P..*	LC226H38-P..*	LC245H38-P..*
NOMINAL VOLUME	m³	80,0	107,0	120,0	150,0	200,0	226,0	245,0
NET VOLUME	m³	79,9	107,4	118,6	154,6	199,6	226,0	245,0
LNG USEFUL CAPACITY (95%, 1 bar)	mt	34,9	46,9	51,8	67,6	87,2	98,8	107,1
MAXIMUM WORKING PRESSURE	bar	*(P) : 05, 09, 14, 17, 22, 27, 30, 34						
DESIGN TEMPERATURE	°C	-196	-196	-196	-196	-196	-196	-196
STANDARDS		EC marking: European directive 2014/68/EU, (optional) ASME stamp: ASME VIII, div.1						
INNER TANK	material	austenitic stainless steel						
OUTER TANK	material	carbon steel						
INSULATION		Perlite insulating material, vacuum < 5 * 10 -²						
INTERNAL FINISH		Particle free						
EXTERNAL FINISH		SA 2 1/2 blasting/ 60 micron polyamide epoxy primer / 60 micron white polyurethane finish						

TECHNICAL DETAILS		LC80H38-P..*	LC107H38-P..*	LC120H38-P..*	LC150H38-P..*	LC200H38-P..*	LC226H38-P..*	LC245H38-P..*
LNG USEFUL CAPACITY (95%, 1 bar)	mt	34,9	46,9	51,8	67,6	87,2	98,8	107,1
PRESSURE BUILD UP UNIT (PBU) CAPACITY (for NG consumption at 3 bar)[1]	Nm³/h	1.000	1.000	1.000	1.000	1.000	1.000	1.000

(1) Please consult us for other flow and/or pressure requirements.

EQUIPMENT INCLUDED

- **Vent pipe with flame arrester:** directional.
- **Vacuum gauge sensor.**
- **Standard filling connection:** ND50.
- **Electronic level indicator** (with pressure and liquid level transmitter): SAMSON.
- **Regulator and economiser valves:** CASH, SAMSON, HEROSE
- **Pressure build up unit** (PBU).
- **Safety valve block:** HEROSE, CAEN.
- **General valves:** HEROSE, CAEN, BESTOBELL.

OPTIONAL EQUIPMENT

- **External economiser kit** with pressure regulator, filter and shut-off valve.
- **Internal economiser:** ND20.
- **Pressure build up unit:** PBU/ other capacities.
- **Level indicator:** mechanical.
- **Fittings/valves:** other makes.
- **Valves pneumatically driven.**
- **Double Filling valve**
- **High point:** double.

lapesa reserves the right to carry out technical changes without prior notice.

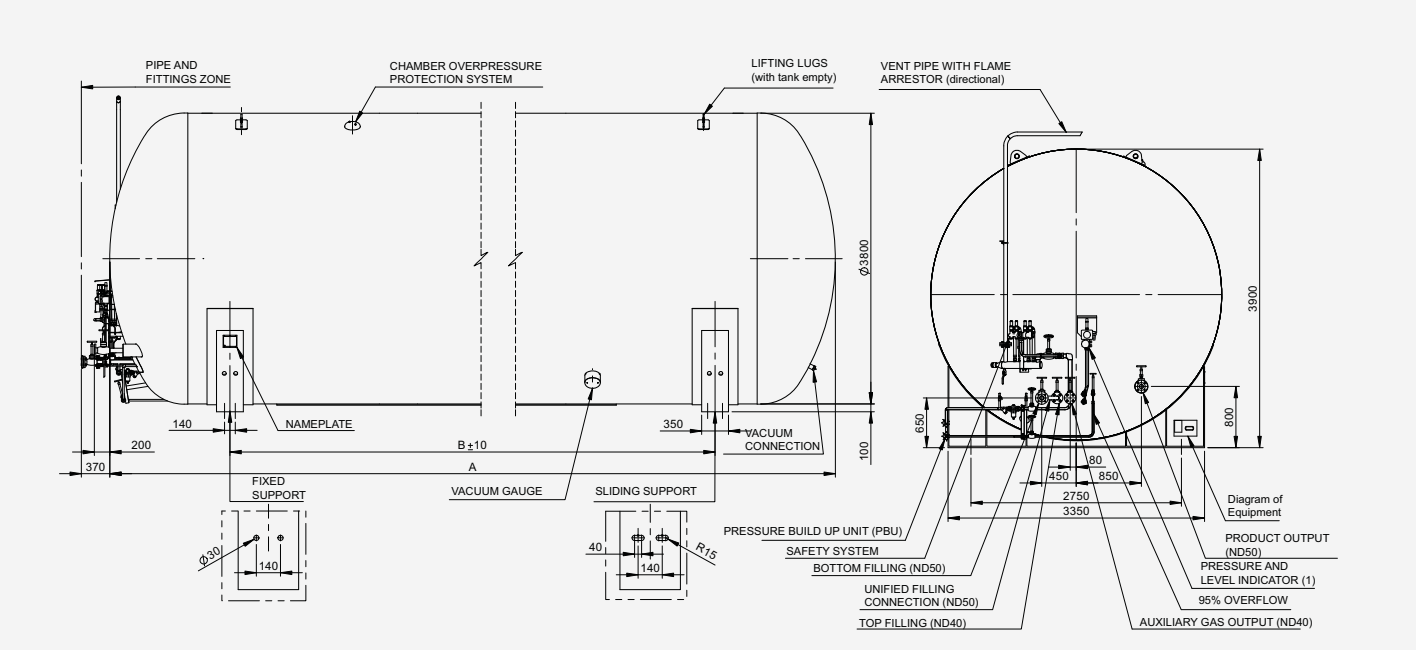

DETAILS FOR HANDLING AND TRANSPORT			LC80H38-P..*	LC107H38-P..*	LC120H38-P..*	LC150H38-P..*	LC200H38-P..*	LC226H38-P..*	LC245H38-P..*
Approx. tare when empty (tank with full equipment)	mt	P05	21,6	27,2	29,4	36,9	46,2	53,0	58,6
		P09	21,6	27,2	29,4	36,9	46,2	53,0	58,6
		P14	23,4	29,4	31,8	40,0	50,1	57,5	63,4
		P17	25,1	31,6	34,2	43,1	54,0	61,9	68,2
		P22	27,6	34,7	37,6	47,6	59,7	68,3	75,1
		P27	30,4	38,2	41,5	52,4	65,8	75,2	82,5
		P30	22,1	40,4	43,9	55,5	69,7	79,6	87,2
		P34	33,9	42,6	46,3	58,6	73,7	84,1	92,0
L: total length including valves	mm		10.415	13.415	14.695	18.705	23.705	26.870	29.870
D: total width	mm		3.800	3.800	3.800	3.800	3.800	3.800	3.800
H: total height (vent pipe disassembled)	mm		3.900	3.900	3.900	3.900	3.900	3.900	3.900
P: distance between supports	mm		6.900	10.000	11.000	15.300	20.000	23.200	26.200

VG	Gas phase filling valve
VL	Liquid phase filling valve
VC	Consumption valve
VR	Overflow valve
PPR	Pressure Build up Unit (PBU)
VEP	Input valve PBU
VSP	Output valve PBU
RP	Pressure regulator
F	Filter
VAG	Auxiliary valve – Gas phase
IN	Level
IP	Manometer
vn	Level gate valve
re	By-pass valve
ri	Bottom level valve
rs	Top level valve
TP	Pressure transmitter (according to model)
TN	Level transmitter (according to model)
CS	3-way valve (safety)
VS	Safety valve
SL	Line safety valve
VA	Pressure relief valve
Pe	Casing safety device
Tv	Vacuum connection
Mv	Vacuum gauge device

SCHEMATIC DIAGRAM
3800 H SERIES

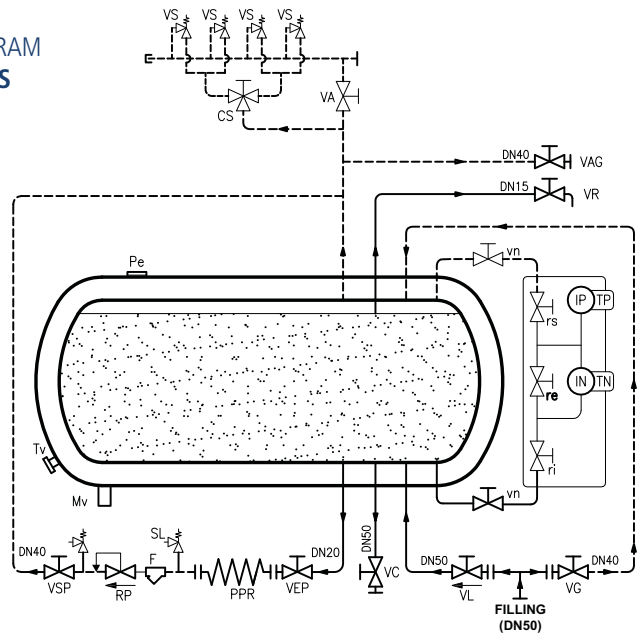

STATIC TANKS FOR LNG STORAGE

HORIZONTAL CRYOGENIC TANKS FOR LIQUEFIED NATURAL GAS

4200 H SERIES

4200 H SERIES

Designation example "LC240H42-P16": **LC**: lapesa cryogenic tank, **240**: nominal volume 240 m³, **H**: horizontal installation, **42**: diameter 4,200 mm, **P16**: maximum working pressure 16 bar

MAIN FEATURES		LC195H42-P..*	LC240H42-P..*	LC285H42-P..*	LC307H42-P..*	LC318H42-P..*
NOMINAL VOLUME	m³	195,0	240,0	285,0	307,0	318,0
NET VOLUME	m³	195,0	240,0	285,0	307,0	318,0
LNG USEFUL CAPACITY (95%, 1 bar)	mt	85,2	104,9	124,5	134,2	139,0
MAXIMUM WORKING PRESSURE	bar	*(P) : 05, 09, 13, 16, 22, 28, 35				
DESIGN TEMPERATURE	°C	-196	-196	-196	-196	-196
STANDARDS		EC marking: European directive 2014/68/EU, (optional) ASME stamp: ASME VIII, div.1				
INNER TANK	material	austenitic stainless steel				
OUTER TANK	material	carbon steel				
INSULATION		Perlite insulating material, vacuum < 5 * 10 $^{-2}$				
INTERNAL FINISH		Particle free				
EXTERNAL FINISH		SA 2 1/2 blasting/ 60 micron polyamide epoxy primer / 60 micron white polyurethane finish				

TECHNICAL DETAILS		LC195H42-P..*	LC240H42-P..*	LC285H42-P..*	LC307H42-P..*	LC318H42-P..*
LNG USEFUL CAPACITY (95%, 1 bar)	mt	85,2	104,9	124,5	134,2	139,0
PRESSURE BUILD UP UNIT (PBU) CAPACITY (for NG consumption at 3 bar)[1]	Nm³/h	2.000	2.000	2.000	2.000	2.000

(1) Please consult us for other flow and/or pressure requirements.

EQUIPMENT INCLUDED

- **Vent pipe with flame arrester:** directional.
- **Vacuum gauge sensor.**
- **Standard filling connection:** ND50.
- **Electronic level indicator** (with pressure and liquid level transmitter): SAMSON.
- **Regulator and economiser valves:** CASH, SAMSON, HEROSE
- **Pressure build up unit** (PBU).
- **Safety valve block:** HEROSE, CAEN.
- **General valves:** HEROSE, CAEN, BESTOBELL.

OPTIONAL EQUIPMENT

- **External economiser kit** with pressure regulator, filter and shut-off valve.
- **Internal economiser:** ND20.
- **Pressure build up unit:** PBU/ other capacities.
- **Level indicator:** mechanical.
- **Fittings/valves:** other makes.
- **Valves pneumatically driven.**
- **Double Filling valve**
- **High point:** double.

lapesa reserves the right to carry out technical changes without prior notice.

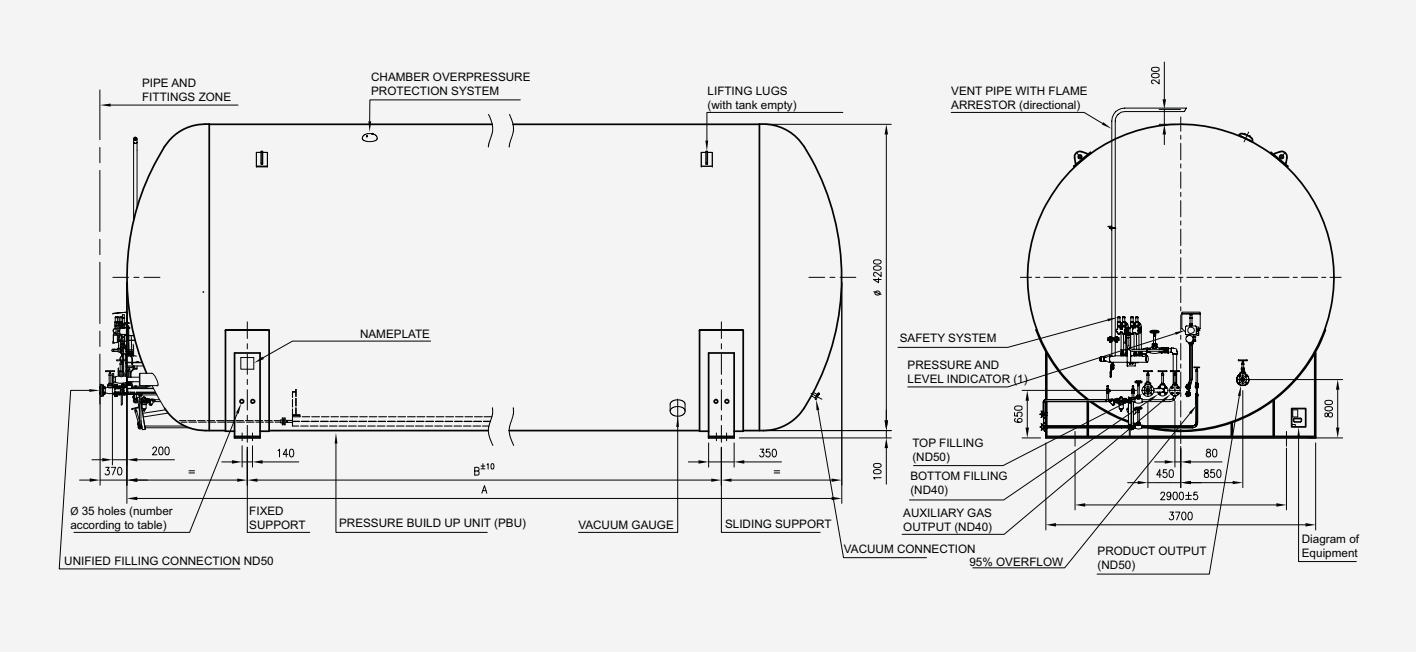

DETAILS FOR HANDLING AND TRANSPORT			LC195H42-P..*	LC240H42-P..*	LC285H42-P..*	LC307H42-P..*	LC318H42-P..*
Approx. tare when empty (tank with full equipment)	mt	P05	46,2	54,9	63,5	67,9	70,3
		P09	46,2	54,9	63,5	67,9	70,3
		P13	49,8	59,2	68,5	73,3	75,9
		P16	53,3	63,5	73,5	78,7	81,4
		P22	58,3	69,6	80,8	86,5	89,5
		P28	63,8	76,2	88,6	94,8	98,1
		P35	67,3	80,5	93,6	100,2	103,7
L: total length including valves	mm		19.070	23.070	37.070	29.700	30.070
D: total width	mm		4.200	4.200	4.200	4.200	4.200
H: total height (vent pipe disassembled)	mm		4.300	4.300	4.300	4.300	4.300
P: distance between supports	mm		15.500	19.500	23.500	25.500	26.500

VG	Gas phase filling valve
VL	Liquid phase filling valve
VC	Consumption valve
VR	Overflow valve
PPR	Pressure Build up Unit (PBU)
VEP	Input valve PBU
VSP	Output valve PBU
RP	Pressure regulator
F	Filter
VAG	Auxiliary valve – Gas phase
IN	Level
IP	Manometer
vn	Level gate valve
re	By-pass valve
ri	Bottom level valve
rs	Top level valve
TP	Pressure transmitter (according to model)
TN	Level transmitter (according to model)
CS	3-way valve (safety)
VS	Safety valve
SL	Line safety valve
VA	Pressure relief valve
Pe	Casing safety device
Tv	Vacuum connection
Mv	Vacuum gauge device

SCHEMATIC DIAGRAM
4200 H SERIES

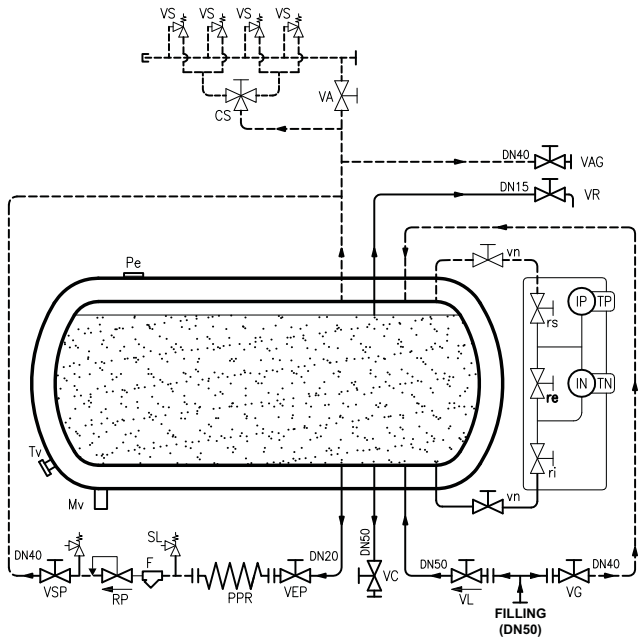

STATIC TANKS FOR LNG STORAGE

VERTICAL CRYOGENIC TANKS FOR LIQUEFIED NATURAL GAS

2200 V SERIES

EQUIPMENT INCLUDED

- **Vent pipe with flame arrester:** directional.
- **Vacuum gauge sensor**.
- **Standard filling connection:** ND50.
- **Electronic level indicator** (with pressure and liquid level transmitter): SAMSON.
- **Regulator and economiser valves:** CASH, SAMSON, HEROSE
- **Pressure build up unit** (PBU).
- **Safety valve block:** HEROSE, CAEN.
- **General valves:** HEROSE, CAEN, BESTOBELL.

OPTIONAL EQUIPMENT

- **External economiser kit** with pressure regulator, filter and shut-off valve.
- **Internal economiser:** ND20.
- **Pressure build up unit:** PBU/ other capacities.
- **Level indicator:** mechanical.
- **Fittings/valves:** other makes.
- **Valves pneumatically driven.**
- **Double Filling valve**
- **High point:** double.

2200 V SERIES

Designation example "LC6V22-P05": **LC**: dlapesa cryogenic tank, **6**: vnominal volume 6 m³, **V**: vertical installation, **22**: diameter 2,200 mm, **P05**: maximum working pressure 5 bar

MAIN FEATURES		LC5V22-P..*	LC6V22-P..*	LC11V22-P..*	LC16V22-P..*	LC20V22-P..*
NOMINAL VOLUME	m³	5,0	6,0	11,0	16,0	20,0
NET VOLUME	m³	4,9	6,2	10,9	15,7	19,9
MAXIMUM WORKING PRESSURE	bar	*(P) : 05, 10, 13, 16, 22, 28, 35				
DESIGN TEMPERATURE	°C	-196	-196	-196	-196	-196
STANDARDS		EC marking: European directive 2014/68/EU, (optional) ASME stamp: ASME VIII, div.1				
INNER TANK	material	austenitic stainless steel				
OUTER TANK	material	carbon steel				
INSULATION		Perlite insulating material, vacuum < 5 * 10 $^{-2}$				
INTERNAL FINISH		Particle free				
EXTERNAL FINISH		SA 2 1/2 blasting/ 60 micron polyamide epoxy primer / 60 micron white polyurethane finish				

TECHNICAL DETAILS		LC5V22-P..*	LC6V22-P..*	LC11V22-P..*	LC16V22-P..*	LC20V22-P..*
LNG USEFUL CAPACITY (95%, 1 bar)	mt	2,1	2,7	4,8	6,9	8,7
PRESSURE BUILD UP UNIT (PBU) CAPACITY (for NG consumption at 3 bar)[1]	Nm³/h	400	400	400	400	400

(1) Please consult us for other flow and/or pressure requirements.

lapesa reserves the right to carry out technical changes without prior notice.

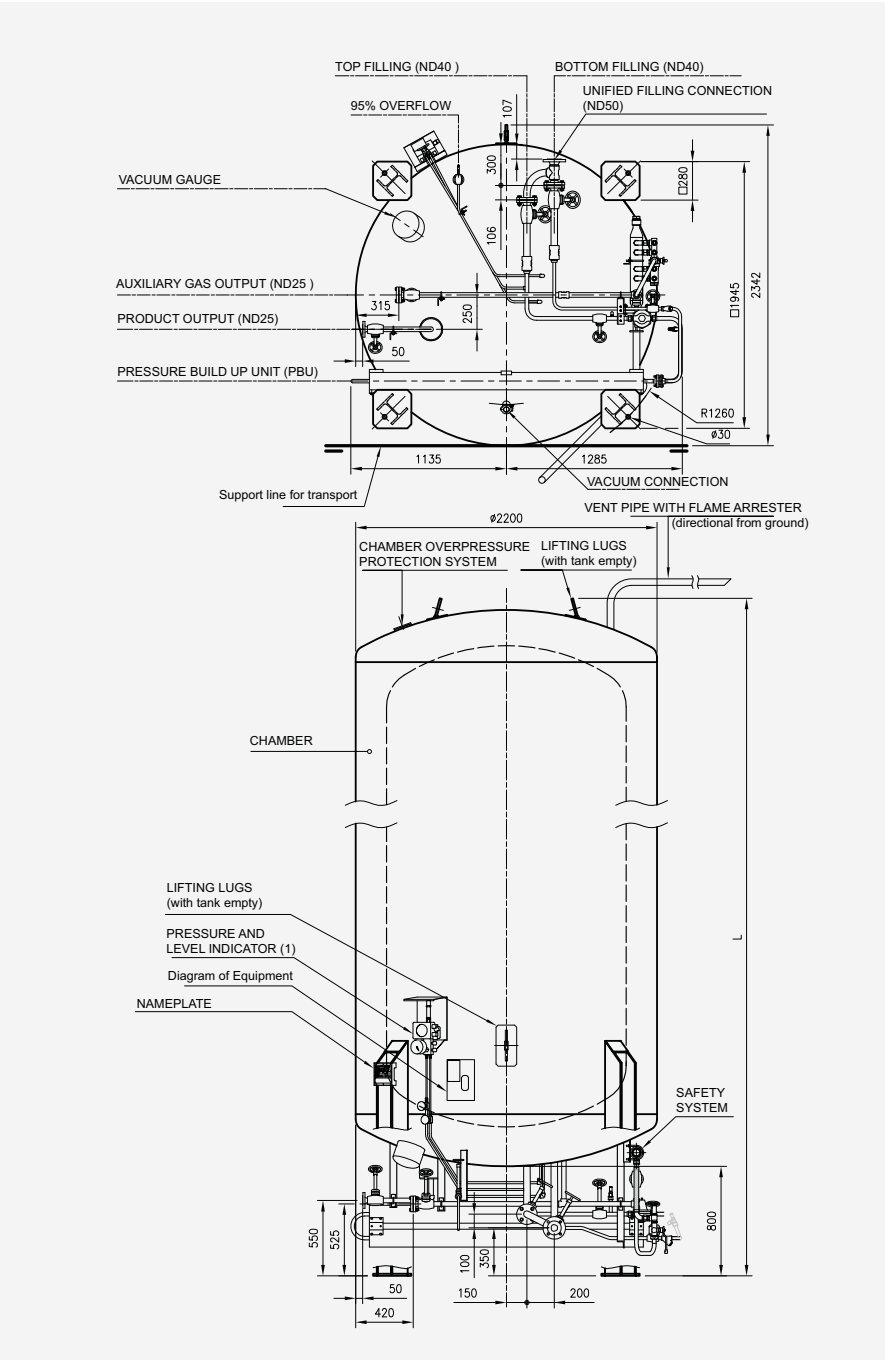

SCHEMATIC DIAGRAM
2200 V SERIES

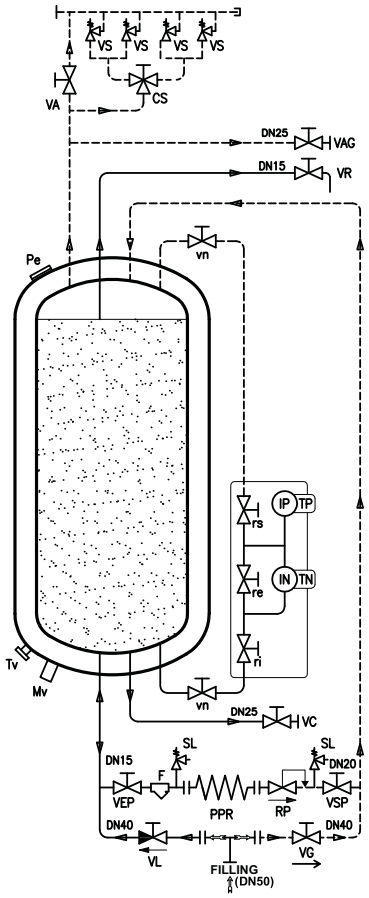

VG	Gas phase filling valve	vn	Level gate valve
VL	Liquid phase filling valve	re	By-pass valve
VC	Consumption valve	ri	Bottom level valve
VR	Overflow valve	rs	Top level valve
PPR	Pressure Build up Unit (PBU)	TP	Pressure transmitter (according to model)
VEP	Input valve PBU	TN	Level transmitter (according to model)
VSP	Output valve PBU	CS	3-way valve (safety)
RP	Pressure regulator	VS	Safety valve
F	Filter	SL	Line safety valve
VAG	Auxiliary valve – Gas phase	VA	Pressure relief valve
IN	Level	Pe	Casing safety device
IP	Manometer	Tv	Vacuum connection
Mv	Vacuum gauge device		

DETAILS FOR HANDLING AND TRANSPORT			LC5V22-P..*	LC6V22-P..*	LC11V22-P..*	LC16V22-P..*	LC20V22-P..*
Approx. tare when empty (tank with full equipment)	mt	P05	3,0	3,5	4,8	6,0	7,3
		P10	3,0	3,5	4,8	6,0	7,3
		P13	3,1	3,6	5,0	6,2	7,7
		P16	3,2	3,7	5,2	6,5	8,0
		P22	3,6	4,1	5,8	7,3	8,9
		P28	3,8	4,4	6,3	7,9	9,7
		P35	4,1	4,7	6,7	8,5	10,5
L: total length including valves	mm		3.830	4.350	6.350	8.350	10.130
D: total width	mm		2.342	2.342	2.342	2.342	2.342
H: total height including vent pipe	mm		2.420	2.420	2.420	2.420	2.420

STATIC TANKS FOR LNG STORAGE

VERTICAL CRYOGENIC TANKS FOR LIQUEFIED NATURAL GAS

3000 V SERIES

EQUIPMENT INCLUDED

- **Vent pipe with flame arrester:** directional.
- **Vacuum gauge sensor.**
- **Standard filling connection:** ND50.
- **Electronic level indicator** (with pressure and liquid level transmitter): SAMSON.
- **Regulator and economiser valves:** CASH, SAMSON, HEROSE
- **Pressure build up unit** (PBU).
- **Safety valve block:** HEROSE, CAEN.
- **General valves:** HEROSE, CAEN, BESTOBELL.

OPTIONAL EQUIPMENT

- **External economiser kit** with pressure regulator, filter and shut-off valve.
- **Internal economiser:** ND20.
- **Pressure build up unit:** PBU/ other capacities.
- **Level indicator:** mechanical.
- **Fittings/valves:** other makes.
- **Valves pneumatically driven.**
- **Double Filling valve**
- **High point:** double.

3000 V SERIES

Designation example "LC20V30-P09": **LC**: lapesa cryogenic tank, **20**: vnominal volume 20 m³, **V**: vertical installation, **30**: diameter 3,000 mm, **P09**: maximum working pressure 9 bar

MAIN FEATURES		LC20V30-P..*	LC30V30-P..*	LC40V30-P..*	LC50V30-P..*	LC60V30-P..*
NOMINAL VOLUME	m³	20,0	30,0	40,0	50,0	60,0
NET VOLUME	m³	19	30,6	39,9	49,9	59,8
MAXIMUM WORKING PRESSURE	bar	*(P) : 05, 10, 16, 20, 24, 30, 38				
DESIGN TEMPERATURE	°C	-196	-196	-196	-196	-196
STANDARDS		EC marking: European directive 2014/68/EU, (optional) ASME stamp: ASME VIII, div.1				
INNER TANK	material	austenitic stainless steel				
OUTER TANK	material	carbon steel				
INSULATION		Perlite insulating material, vacuum < 5 * 10 $^{-2}$				
INTERNAL FINISH		Particle free				
EXTERNAL FINISH		SA 2 1/2 blasting/ 60 micron polyamide epoxy primer / 60 micron white polyurethane finish				

TECHNICAL DETAILS		LC20V30-P..*	LC30V30-P..*	LC40V30-P..*	LC50V30-P..*	LC60V30-P..*
LNG USEFUL CAPACITY (95%, 1 bar)	mt	8,3	13,4	17,4	21,8	26,1
PRESSURE BUILD UP UNIT (PBU) CAPACITY (for NG consumption at 3 bar)[1]	Nm³/h	1.000	1.000	1.000	1.000	1.000

(1) Please consult us for other flow and/or pressure requirements.

lapesa reserves the right to carry out technical changes without prior notice.

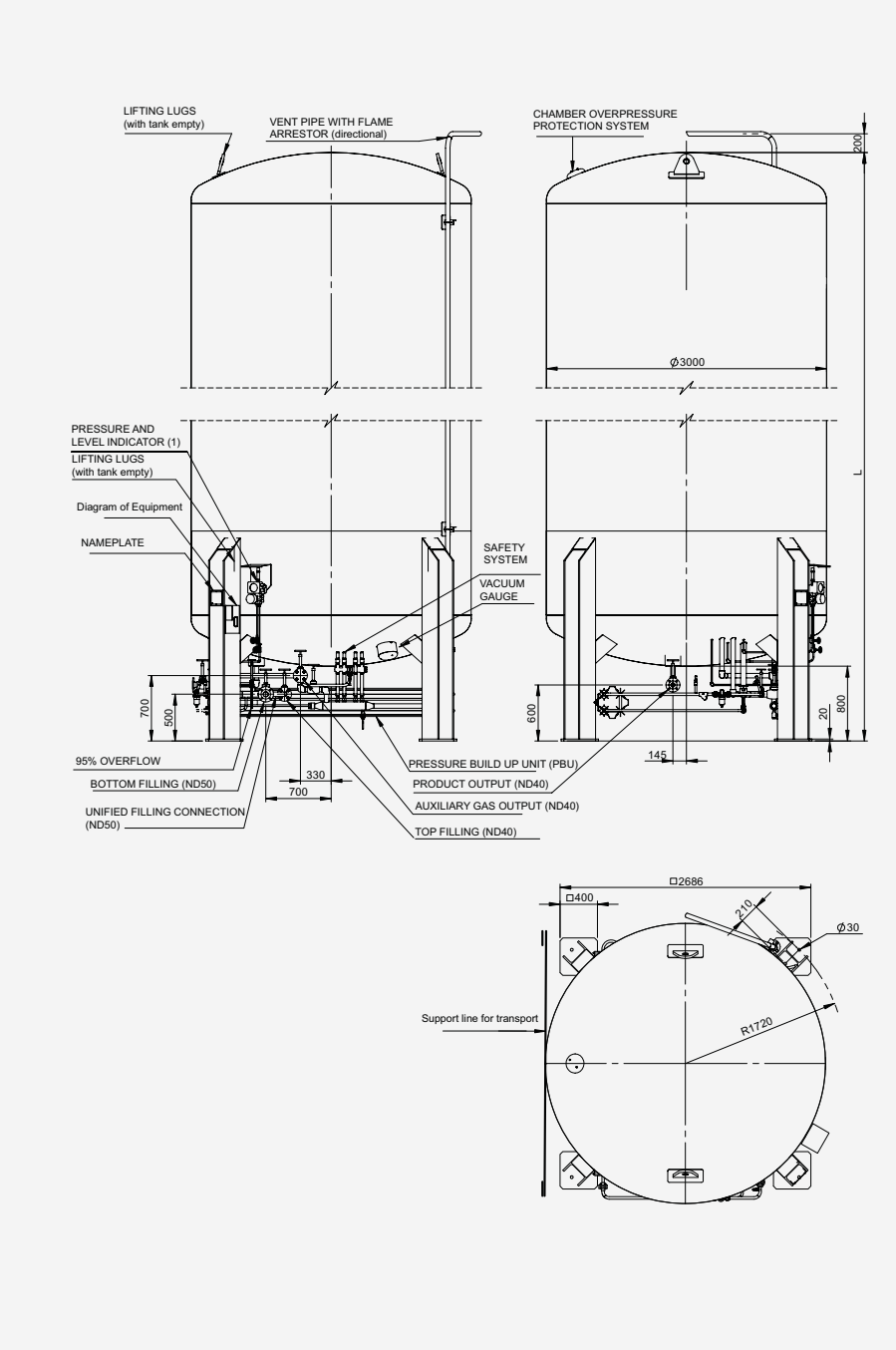

SCHEMATIC DIAGRAM
3000 V SERIES

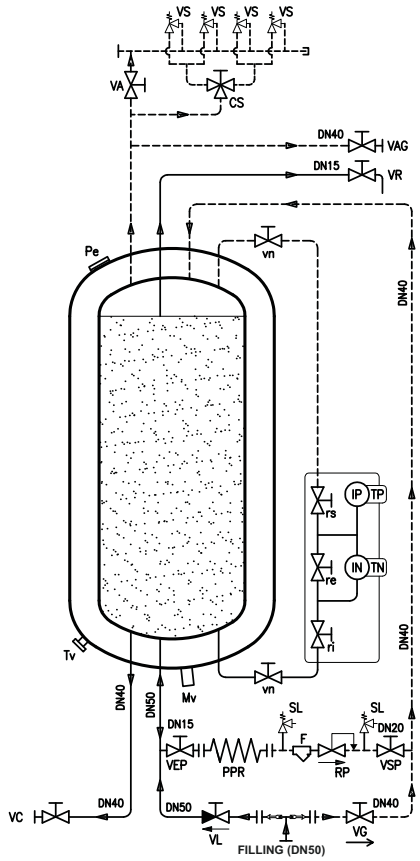

VG	Gas phase filling valve	vn	Level gate valve
VL	Liquid phase filling valve	re	By-pass valve
VC	Consumption valve	ri	Bottom level valve
VR	Overflow valve	rs	Top level valve
PPR	Pressure Build up Unit (PBU)	TP	Pressure transmitter (according to model)
VEP	Input valve PBU	TN	Level transmitter (according to model)
VSP	Output valve PBU	CS	3-way valve (safety)
RP	Pressure regulator	VS	Safety valve
F	Filter	SL	Line safety valve
VAG	Auxiliary valve – Gas phase	VA	Pressure relief valve
IN	Level	Pe	Casing safety device
IP	Manometer	Tv	Vacuum connection
Mv	Vacuum gauge device		

DETAILS FOR HANDLING AND TRANSPORT			LC20V30-P..*	LC30V30-P..*	LC40V30-P..*	LC50V30-P..*	LC60V30-P..*
Approx. tare when empty (tank with full equipment)	mt	P05	9,0	10,5	13,4	15,9	18,4
		P10	9,0	10,5	13,4	15,9	18,4
		P16	10,0	11,7	14,9	17,6	20,3
		P20	10,7	12,6	16,1	19,0	22,0
		P24	11,4	13,6	17,2	20,4	23,7
		P30	12,3	14,9	18,9	22,4	26,1
		P38	13,4	16,4	20,8	24,7	28,7
L: total length including valves	mm		5.780	8.144	10.144	12.214	14.144
D: total width	mm		3.000	3.000	3.000	3.000	3.000
H: total height including vent pipe	mm		3.040	3.040	3.040	3.040	3.040

STATIC TANKS FOR LNG STORAGE
VERTICAL CRYOGENIC TANKS FOR LIQUEFIED NATURAL GAS

3800 V SERIES

EQUIPMENT INCLUDED

- **Vent pipe with flame arrester:** directional.
- **Vacuum gauge sensor.**
- **Standard filling connection:** ND50.
- **Electronic level indicator** (with pressure and liquid level transmitter): SAMSON.
- **Regulator and economiser valves:** CASH, SAMSON, HEROSE
- **Pressure build up unit** (PBU).
- **Safety valve block:** HEROSE, CAEN.
- **General valves:** HEROSE, CAEN, BESTOBELL.

OPTIONAL EQUIPMENT

- **External economiser kit** with pressure regulator, filter and shut-off valve.
- **Internal economiser:** ND20.
- **Pressure build up unit:** PBU/ other capacities.
- **Level indicator:** mechanical.
- **Fittings/valves:** other makes.
- **Valves pneumatically driven.**
- **Double Filling valve**
- **High point:** double.

3800 V SERIES

Designation example "LC80V38-P22": **LC**: lapesa cryogenic tank, **80**: nominal volume 80 m³, **V**: vertical installation, **38**: diameter 3,800 mm, **P22**: maximum working pressure 22 bar

MAIN FEATURES		LC80V38-P..*	LC107V38-P..*	LC120V38-P..*	LC150V38-P..*	LC200V38-P..*
NOMINAL VOLUME	m³	80,0	107,0	120,0	150,0	200,0
NET VOLUME	m³	79,9	107,4	118,6	154,6	199,6
MAXIMUM WORKING PRESSURE	bar	*(P) : 05, 09, 14, 17, 22, 27, 30, 34				
DESIGN TEMPERATURE	°C	-196	-196	-196	-196	-196
STANDARDS		EC marking: European directive 2014/68/EU, (optional) ASME stamp: ASME VIII, div.1				
INNER TANK	material	austenitic stainless steel				
OUTER TANK	material	carbon steel				
INSULATION		Perlite insulating material, vacuum < 5 * 10 $^{-2}$				
INTERNAL FINISH		Particle free				
EXTERNAL FINISH		SA 2 1/2 blasting/ 60 micron polyamide epoxy primer / 60 micron white polyurethane finish				

TECHNICAL DETAILS		LC80V38-P..*	LC107V38-P..*	LC120V38-P..*	LC150V38-P..*	LC200V38-P..*
LNG USEFUL CAPACITY (95%, 1 bar)	mt	34,9	46,9	51,8	67,6	87,2
PRESSURE BUILD UP UNIT (PBU) CAPACITY (for NG consumption at 3 bar)[1]	Nm³/h	1.000	1.000	1.000	1.000	1.000

(1) Please consult us for other flow and/or pressure requirements.

lapesa reserves the right to carry out technical changes without prior notice.

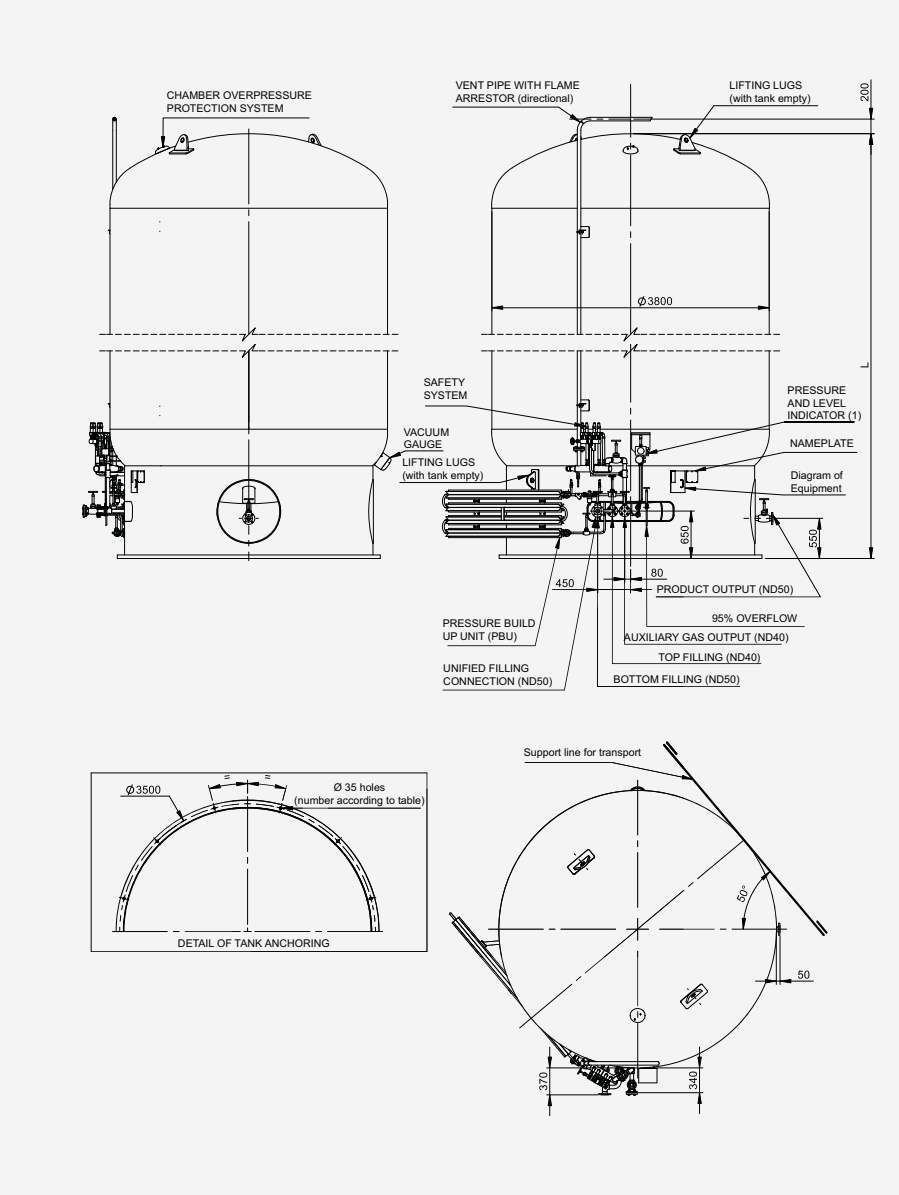

SCHEMATIC DIAGRAM
3800 V SERIES

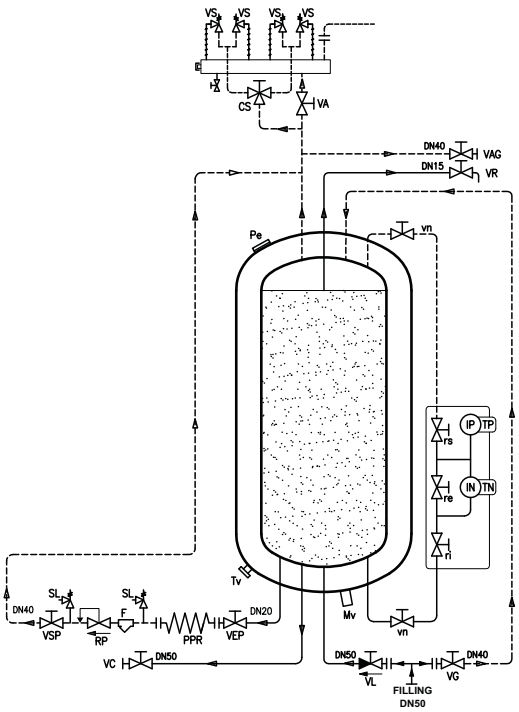

VG	Gas phase filling valve	vn	Level gate valve
VL	Liquid phase filling valve	re	By-pass valve
VC	Consumption valve	ri	Bottom level valve
VR	Overflow valve	rs	Top level valve
PPR	Pressure Build up Unit (PBU)	TP	Pressure transmitter (according to model)
VEP	Input valve PBU	TN	Level transmitter (according to model)
VSP	Output valve PBU	CS	3-way valve (safety)
RP	Pressure regulator	VS	Safety valve
F	Filter	SL	Line safety valve
VAG	Auxiliary valve – Gas phase	VA	Pressure relief valve
IN	Level	Pe	Casing safety device
IP	Manometer	Tv	Vacuum connection
Mv	Vacuum gauge device		

DETAILS FOR HANDLING AND TRANSPORT			LC80V38-P..*	LC107V38-P..*	LC120V38-P..*	LC150V38-P..*	LC200V38-P..*
Approx. tare when empty (tank with full equipment)	mt	P05	21,9	27,5	30,2	36,6	45,3
		P09	21,9	27,5	30,2	36,6	45,3
		P14	23,7	29,7	32,6	39,7	49,2
		P17	25,4	31,9	35,0	42,8	53,1
		P22	27,9	35,0	38,4	47,3	58,8
		P27	30,7	35,5	42,3	52,1	64,9
		P30	32,4	40,7	44,7	55,2	68,8
		P34	34,2	42,9	47,1	58,3	72,8
L: total length including valves	mm		10.920	13.945	15.195	19.195	24.195
D: total width	mm		3.810	3.810	3.810	3.810	3.810
H: total height including vent pipe	mm		3.810	3.810	3.810	3.810	3.810

STATIC TANKS FOR LNG STORAGE
VERTICAL CRYOGENIC TANKS FOR LIQUEFIED NATURAL GAS

4200 V SERIES

EQUIPMENT INCLUDED

- **Vent pipe with flame arrester:** directional.
- **Vacuum gauge sensor.**
- **Standard filling connection:** ND50.
- **Electronic level indicator** (with pressure and liquid level transmitter): SAMSON.
- **Regulator and economiser valves:** CASH, SAMSON, HEROSE
- **Pressure build up unit** (PBU).
- **Safety valve block:** HEROSE, CAEN.
- **General valves:** HEROSE, CAEN, BESTOBELL.

OPTIONAL EQUIPMENT

- **External economiser kit** with pressure regulator, filter and shut-off valve.
- **Internal economiser:** ND20.
- **Pressure build up unit:** PBU/ other capacities.
- **Level indicator:** mechanical.
- **Fittings/valves:** other makes.
- **Valves pneumatically driven.**
- **Double Filling valve**
- **High point:** double.

4200 V SERIES

Designation example "LC240V42-P20": **LC**: lapesa cryogenic tank, **240**: nominal volume 240 m³, **V**: vertical installation, **42**: diameter 4,200 mm, **P20**: maximum working pressure 20 bar

MAIN FEATURES		LC195V42-P..*	LC240V42-P..*	LC285V42-P..*	LC307V42-P..*	LC318V42-P..*
NOMINAL VOLUME	m³	195,0	240,0	285,0	307,0	318,0
NET VOLUME	m³	195	240	285	307	318
MAXIMUM WORKING PRESSURE	bar	*(P) : 05, 09, 12, 15, 20, 24, 27, 30				
DESIGN TEMPERATURE	°C	-196	-196	-196	-196	-196
STANDARDS		EC marking: European directive 2014/68/EU, (optional) ASME stamp: ASME VIII, div.1				
INNER TANK	material	austenitic stainless steel				
OUTER TANK	material	carbon steel				
INSULATION		Perlite insulating material, vacuum < 5 * 10 $^{-2}$				
INTERNAL FINISH		Particle free				
EXTERNAL FINISH		SA 2 1/2 blasting/ 60 micron polyamide epoxy primer / 60 micron white polyurethane finish				

TECHNICAL DETAILS		LC195V42-P..*	LC240V42-P..*	LC285V42-P..*	LC307V42-P..*	LC318V42-P..*
LNG USEFUL CAPACITY (95%, 1 bar)	mt	85,2	104,9	124,5	134,2	139,0
PRESSURE BUILD UP UNIT (PBU) CAPACITY (for NG consumption at 3 bar)[1]	Nm³/h	2.000	2.000	2.000	2.000	2.000

(1) Please consult us for other flow and/or pressure requirements.

lapesa reserves the right to carry out technical changes without prior notice.

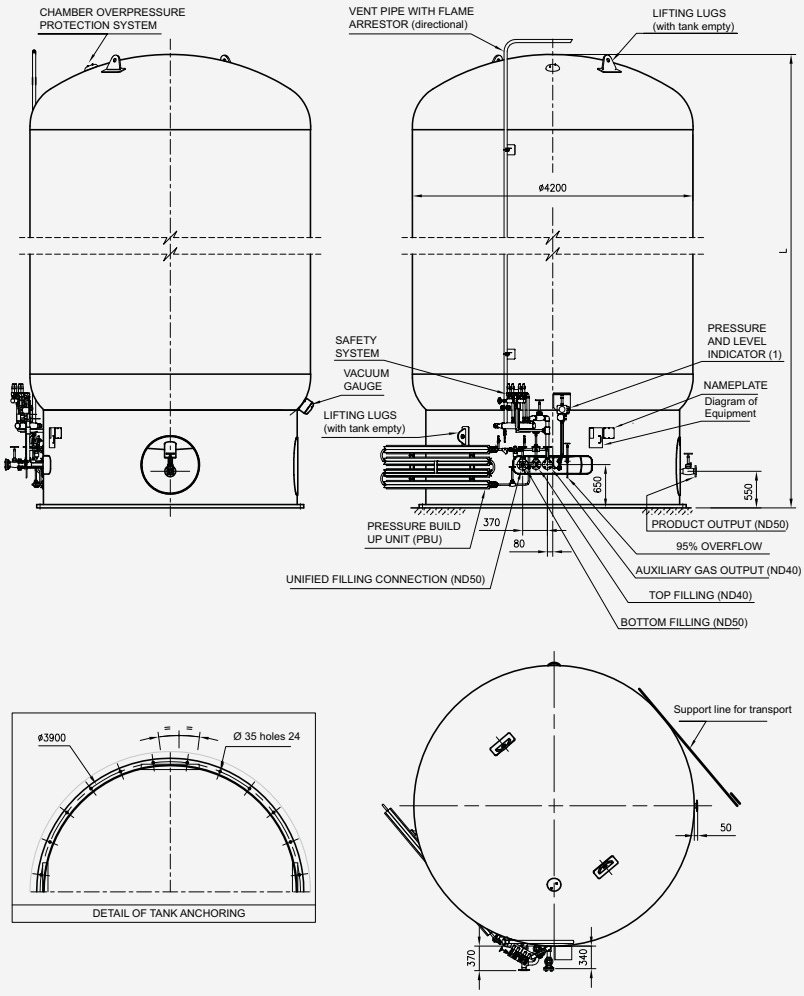

SCHEMATIC DIAGRAM
4200 V SERIES

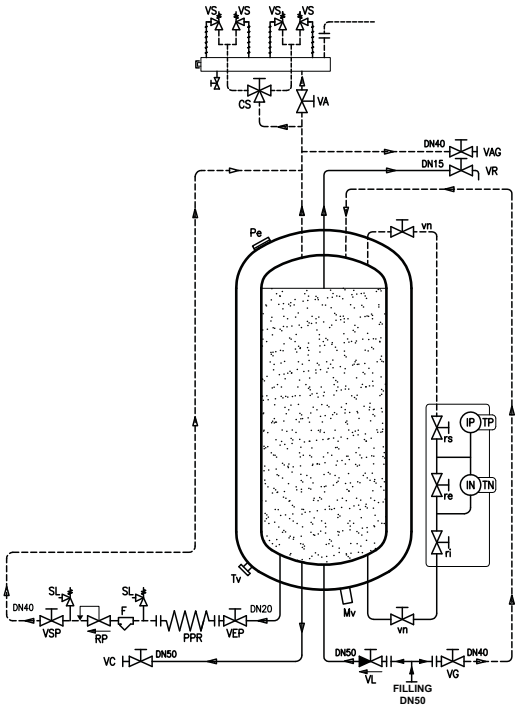

VG	Gas phase filling valve	vn	Level gate valve
VL	Liquid phase filling valve	re	By-pass valve
VC	Consumption valve	ri	Bottom level valve
VR	Overflow valve	rs	Top level valve
PPR	Pressure Build up Unit (PBU)	TP	Pressure transmitter (according to model)
VEP	Input valve PBU	TN	Level transmitter (according to model)
VSP	Output valve PBU	CS	3-way valve (safety)
RP	Pressure regulator	VS	Safety valve
F	Filter	SL	Line safety valve
VAG	Auxiliary valve – Gas phase	VA	Pressure relief valve
IN	Level	Pe	Casing safety device
IP	Manometer	Tv	Vacuum connection
Mv	Vacuum gauge device		

DETAILS FOR HANDLING AND TRANSPORT			LC195V42-P..*	LC240V42-P..*	LC285V42-P..*	LC307V42-P..*	LC318V42-P..*
Approx. tare when empty (tank with full equipment)	mt	P05	47,0	55,7	64,3	68,7	71,1
		P09	47,0	55,7	64,3	68,7	71,1
		P12	50,6	60,0	69,3	74,1	76,7
		P15	54,1	64,3	74,3	79,5	82,2
		P20	59,1	70,4	81,6	87,3	90,3
		P24	64,6	77,0	89,4	95,6	98,9
		P27	68,1	81,3	94,4	101,0	104,5
		P30	71,6	85,5	99,4	106,4	110,1
L: total length including valves	mm		19.580	23.580	27.580	29.580	30.580
D: total width	mm		4.210	4.210	4.210	4.210	4.210
H: total height including vent pipe	mm		4.210	4.210	4.210	4.210	4.210

LNG TANKS FOR SERVICE STATIONS

SPECIFIC LNG TANKS FOR SERVICE STATIONS

LC GNV

Tanks for the supply of natural gas for vehicles at Service Stations, for CNG (compressed natural gas) and LNG (liquefied natural gas) or both at the same time.

VERTICAL CRYOGENIC TANK FOR THE SUPPLY OF CNG AND VEHICLE LNG

GENERAL FEATURES

- Tanks designed and adapted to the needs and characteristics of each individual supply station.
- Tanks adapt to the supply plant design, incorporating all the necessary outputs and connections for each function:
  - LNG connection.
  - CNG connection.
  - Pump returns, saturation return.
  - Extra connections for consumption at the station itself…
- For volumes as per our catalogue, at different design pressures.
- Tanks with "cold converter" or "thermosiphon" system.
- Standard design pressure 18 bar. Other design pressures available upon request.

Consult us about your project requirements!

lapesa reserves the right to carry out technical changes without prior notice.

SCHEMATIC DIAGRAMS

VG	Gas phase filling valve
VL	Liquid phase filling valve
VC	Consumption valve
VR	Overflow valve
PPR	Pressure Build up Unit (PBU)
VEP	Input valve PBU
VSP	Output valve PBU
RP	Pressure regulator
F	Filter
VAG	Auxiliary valve – Gas phase
IN	Level
IP	Manometer
vn	Level gate valve
re	By-pass valve
ri	Bottom level valve

rs	Top level valve
TP	Pressure transmitter (according to model)
TN	Level transmitter (according to model)
CS	3-way valve (safety)
VS	Safety valve
SL	Line safety valve
VA	Pressure relief valve
Pe	Casing safety device
Tv	Vacuum connection
Mv	Vacuum gauge device
TRC	Pump return pipe CNG
TLC	Connection pipe to pump CNG
TRL	Pump return pipe LNG
TLL	Connection pipe to pump LNG
VRG	Returns

EXAMPLES OF SCHEMATIC DIAGRAMS

SUPPLY OF CNG AND LNG FOR VEHICLES

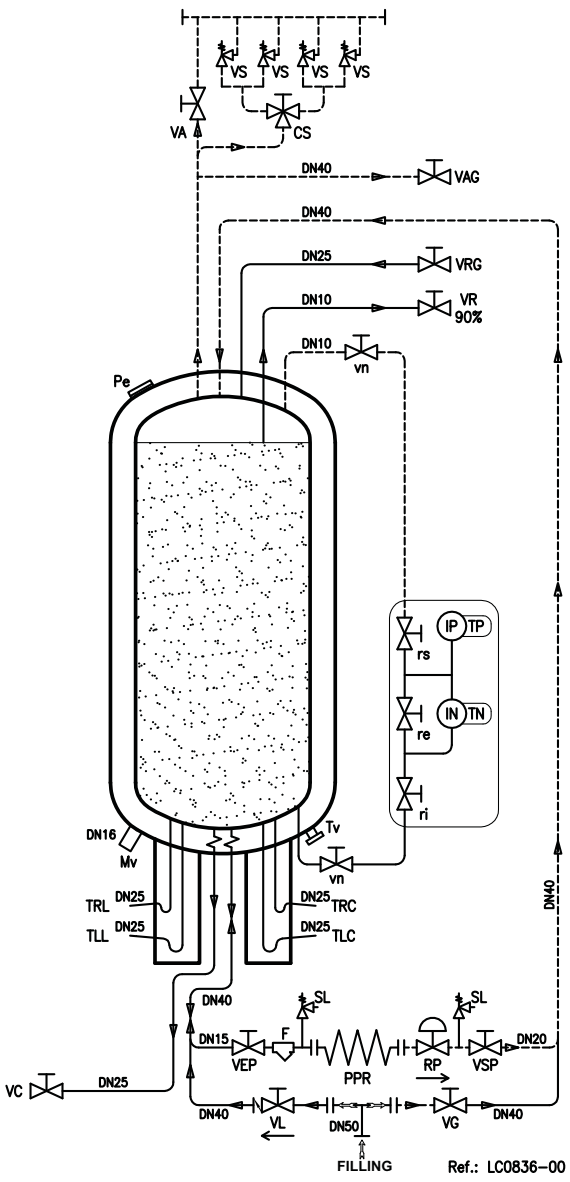

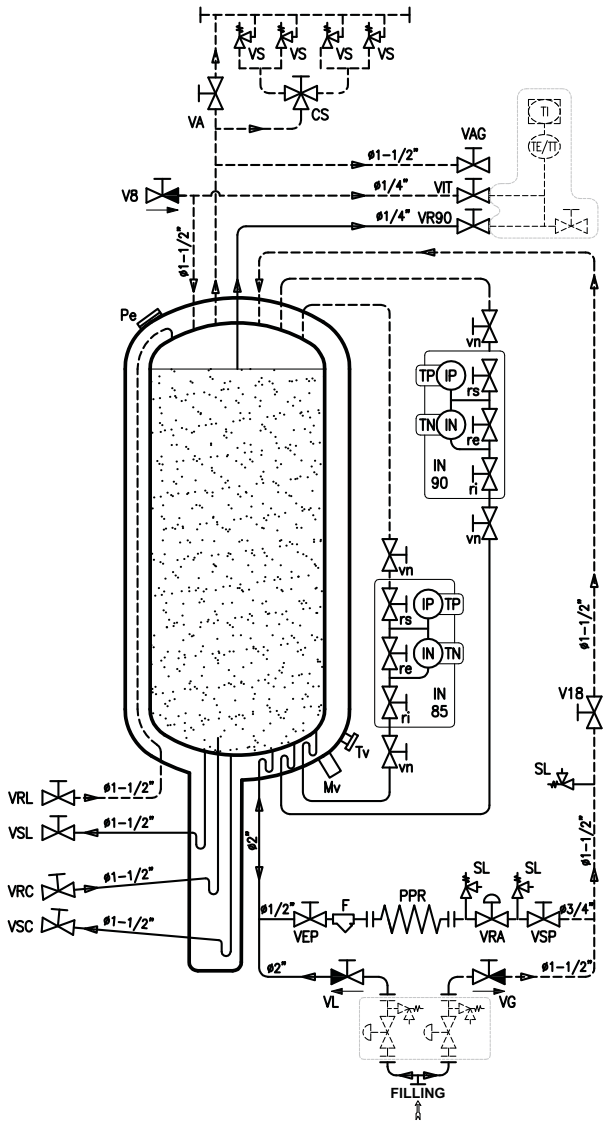

ISO-CONTAINERS FOR **LNG** TRANSPORT

TANK-CONTAINER

LTCC43

Cryogenic tank-container for transporting liquefied natural gas LNG (UN 1972), methane (UN 1972), ethane (UN 1961), ethylene (UN 1038), nitrogen (UN 1977), with cryogenic insulation, cryogenic vacuum insulation and non-compressible insulating material.

LTCC43

GENERAL FEATURES

- Tank-container for transporting cryogenic liquefied gas.
- Multimodal transport (short sea journeys).
- Cryogenic vacuum insulation and non-compressible insulating material.
- For the transport of cryogenic liquefied gases: LNG (UN 1972), methane (UN 1972), ethane (UN 1961), ethylene (UN 1038), nitrogen (UN 1977).
- Container type: 1AA acc. to ISO 668.
- Apt for transport with partial load.
- Applicable European directives: 2010/35/EU (PI marking), 2008/68/EC.
- Standards applied: compliant with ADR2017, RID, ISO, CSC, IMDG, EN13530.
- Number of compartments: 1.
- Volumen nominal: 43,5 m^3.
- Empty weight: 9.5 mt.
- Carga de GNL: 15,6 mt.

TANK DESIGN DATA

- DESIGN PRESSURE (ADR): 13.7 bar.
- TEST PRESSURE: 13.7 BAR.
- ALLOWABLE MAX. PRESSURE: 9.5 bar.
- DESIGN TEMPERATURE: -196 +50 °C.
- CONSTRUCTION CODE: ADR.
- ISO CONTAINER TESTS ACCORDING TO ISO, IMDG, CSC.

FINISHES

- PRIMER: Polyamide epoxy (60 microns).
- TOP COAT: White polyurethane (60 microns).
  Total thickness: 120 microns.
- INTERIOR: Particle-free and dry.

lapesa reserves the right to carry out technical changes without prior notice.

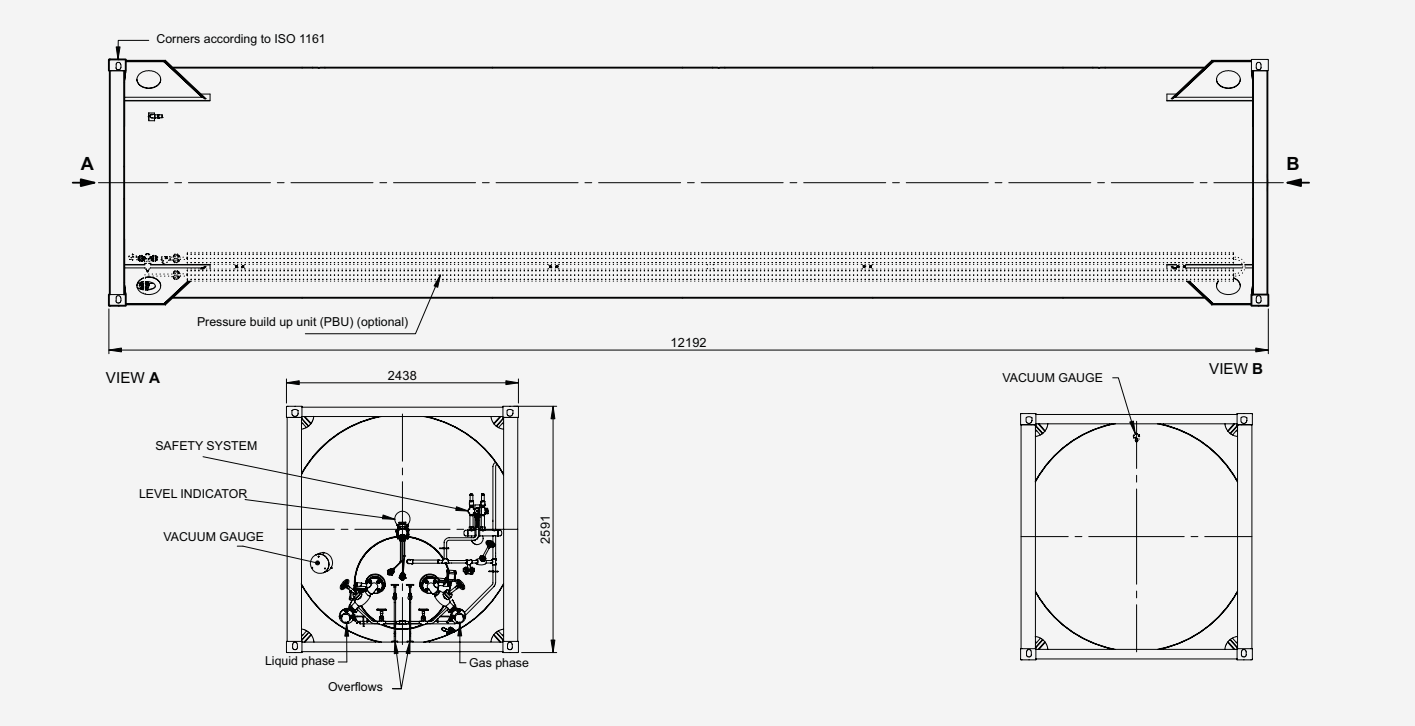

EQUIPMENT AND FUNCTIONS

- LIQUID PHASE and GAS PHASE:
  - ENAGAS 2" type bronze connector with screw cap.
  - Shut-off valve, seat valve, manual valve, extended stem valve.
  - CAEN type pneumatic bottom valve with non-return.
  - Automatic safety valve between manual stopcock and cap.
  - Manual relief valve between manual stopcock and cap.
- OVERFLOWS: Two high-point pipes with manual valve (95% and 83%).
- SAFETY: Cryogenic safety unit with double valve and diverter.
- VENTING: Pipe for manual venting.
- LEVEL AND PRESSURE: Differential pressure level indicator. Samson or Wika type. Includes gas phase pressure manometer.
- EXTRA CONNECTION: Connection to fit pressure build up unit (PBU).
- SHUT-OFF VALVES: All manual valves are HEROSE type, cryogenic, extended stem valves.
- OPTIONAL PBU UNIT: The equipment can be supplied with the PBU fitted. A SAMSON type mechanical regulator is included.

CS	3-way valve (safety)
VS	Safety valve
VA	Pressure relief valve
ri	Bottom level valve
rs	Top level valve
N	Level
P	Manometer
Mv	Vacuum gauge device
Pe	Casing safety device
Tv	Vacuum connection
FG	Gas phase
FL	Liquid phase
VR	Maximum filling valve
V*	Manual valves
VN*	Pneumatic bottom valve
PPR	Pressure Build up Unit (PBU)
RP	Pressure regulator
F	Filter

SCHEMATIC DIAGRAM
LTCC43 TANK-CONTAINER

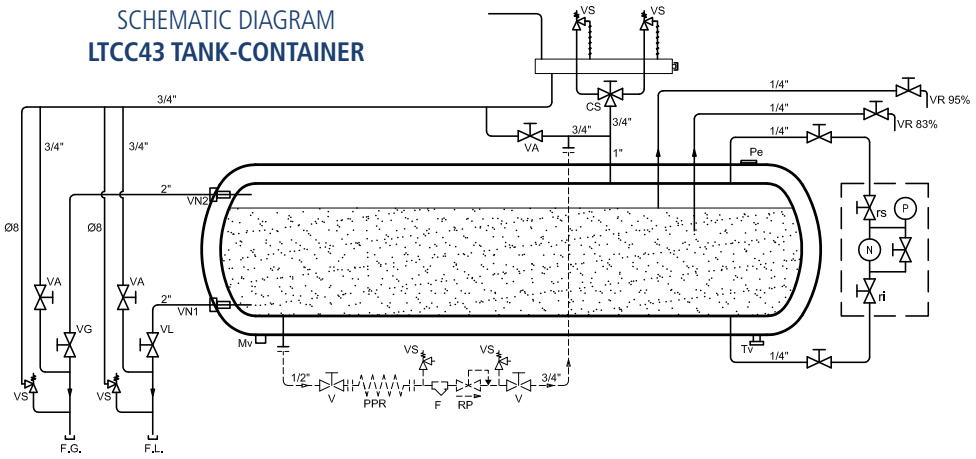

LNG SKIDS

LNG SKID

LCUA 1000 V

Cryogenic skid unit for liquefied natural gas LNG (UN 1972), methane (UN 1972), ethane (UN 1961), ethylene (UN 1038), nitrogen (UN 1977).
EC marking (Directive 2014/68/EU).

LCUA 1000 V

GENERAL FEATURES

- "Plug and play" equipment.
- EC marking (Directive 2014/68/EU).
- Geometric volume: 1,000 litres.
- Maximum allowable pressure: 10 bar (other pressures available upon request).
- Approximate weight: 1,200 kg.
- Modular.
- Insulation system: perlite in vacuum chamber.
- Easy to transport vertically on truck. 192 x 92 mm orifices for handling with forklift, when empty.
- Good use of space.

FITTINGS INCLUDED

- Pressure build-up unit (PBU).
- Environmental gasifier to consumption.
- Auxiliary gas phase connection.
- Economiser.
- ND40 flame arrester, directional and detachable.
- "Teledyne" type vacuum gauge.
- Media 05 (Samson) type level and pressure indicator. Options: electric, with level transmitter and pressure transmitter.

lapesa reserves the right to carry out technical changes without prior notice.

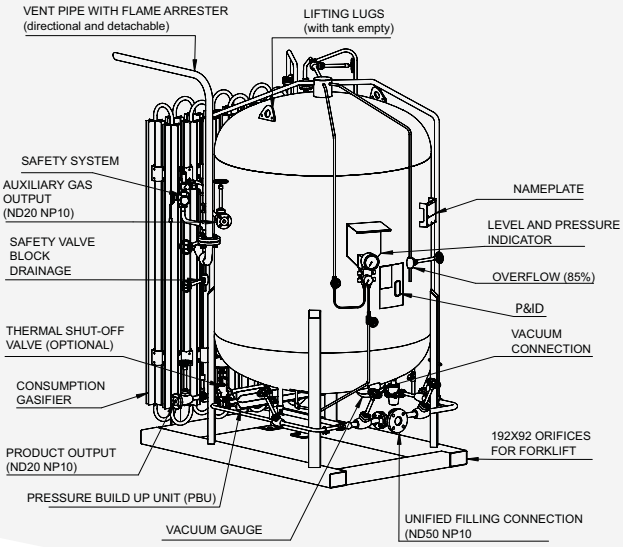

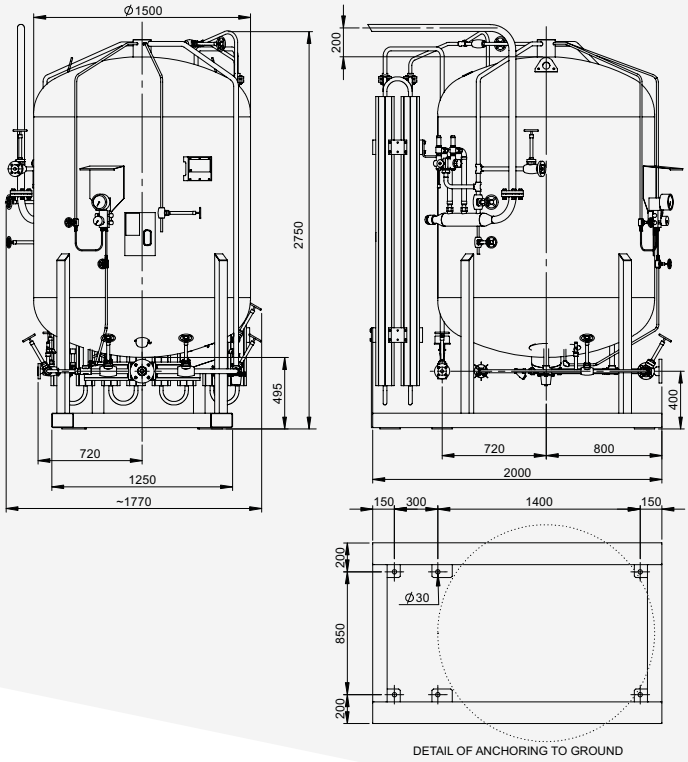

MODULAR EQUIPMENT

- STD 35 Nm³/h ambient gasifier. (Extendable to 70 Nm³/h and 105 Nm³/h). Possibility of extending after installation.*
- Elevated frame.
- PBU: 1/2" input/output piping. Max. capacity 100 Nm³/h at 3 bar (extendable at request).
- Filling lines.
- 1/2" economiser and economiser-regulator valve.
- ND20 auxiliary gas phase connection. (Optional temperature controlled shut-off valve).
- Safety: Flame arrester; double safety valve; 3-way valve; discharge manifold with drainage system and manual drainage valve.

(*) Gasification capacity can be increased by including more powerful gasification modules.

VG	Gas phase filling valve
VL	Liquid phase filling valve
VC	Consumption valve
VR85	Overflow valve 85%
PPR	Pressure Build up Unit (PBU)
VEP	PBU input valve
VSP	PBU output valve
RP	Pressure regulator
F	Filter
VAG	Gas phase auxiliary valve
IN	Level
IP	Manometer
vn	Level gate valve
re	By-pass valve
ri	Bottom level valve
rs	Top level valve
TP	Pressure transmitter (according to model)
TN	Level transmitter (according to model)
CS	3-way valve (safety)
VS	Safety valve
SL	Line safety valve
VA	Pressure relief valve
Pe	Casing safety device
Tv	Vacuum connection
Mv	Vacuum gauge device
VRE	Economiser regulator valve
VSE	Economiser output valve
VSD	Tank output valve

SCHEMATIC DIAGRAM
LNG SKID LCUA 1000 V

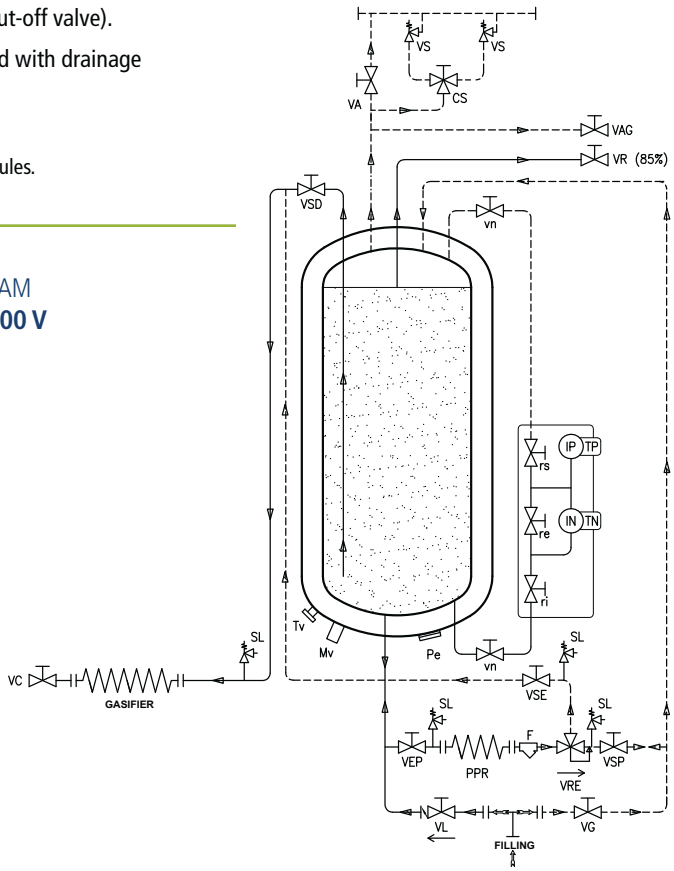

LNG TANKERS

TANKER FOR THE **TRANSPORT AND SUPPLY** OF LNG

LTC58

Cylindrical cryogenic tanker for the transport and supply of LNG, 58 m³ capacity, 44 TN MAM chassis.

LTC58

GENERAL FEATURES

- Type: Cylindrical, chassis-mounted.
- Nominal volume: 58 m³.
- Maximum authorised mass (MAM): 44 mt.
- Section: Circular.
- External tank diameter 2,550 mm.
- Total tank length* 13,800 mm.
- Total vehicle length* 14,000 mm.
- Tractor head tare* 7.5 mt.
- Semitrailer tare* 12.5 mt.
- Load capacity 95%* 23 mt (a 3 bar).
- Load capacity 88%* 21 mt (a 0 bar).
- Load capacity (MAM 44 mt)* 24 mt.
- No. of manholes: No manhole.

INSPECTION

- Tank body: 100% X-ray
- Tests: according to ADR/TPED (EN-13530).
- Certified tests:
  - Resistance test.
  - Helium leak testing.
  - Volume check.
  - Tightness test.
  - Interior inspection.

DESIGN

- TPED 2010/35/EU approved, compliant with directive 2014/103/EU, IMDG (short distances).
- Design code: UNE-EN-13530.
- ADR transport regulations.
- Classes 2.
- Products to be transported: LNG (UN 1972), methane (UN 1972), ethane (UN 1961), ethylene (UN 1038), nitrogen (UN 1977).
- Maximum operating pressure: 3 bar.
- Test pressure 5.2 bar.
- Design temperature: -196ºC + 50ºC.
- Material inner tank in austenitic stainless steel.
- Thermal insulation: Multilayer insulation + vacuum.

FINISHES

- Anti-corrosive primer + polyurethane top coat.

ACCESSORIES INCLUDED

- Discharge pump with pressure build up.
- Volumetric flow meter.
- Cabinet for loading/unloading equipment.
- Toolbox.
- Powder fire extinguishers.

(*) guideline values.

lapesa reserves the right to carry out technical changes without prior notice.

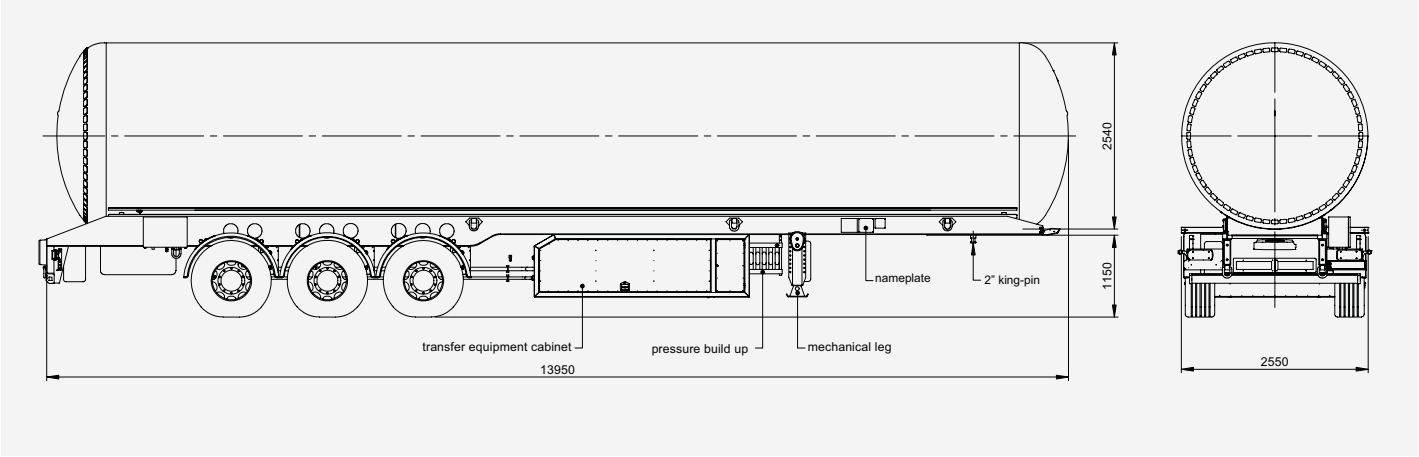

CONTROL AND SAFETY FITTINGS

- Safety valves.
- High point stopcock. Mechanical level.
- Filling level and pressure indicator.
- Manual and automatic relief valves on pipes.
- Internal valves on connections to tank.
- Control panel.

LOADING AND UNLOADING

- Valves-liquid phase loading and unloading.
- Valves-gas phase loading and unloading.
- Valves-liquid phase pressure build up.
- PBU vaporiser.
- Discharge valves on both sides of the truck.

WHEELS, SUPPORTS AND KING-PIN

- Three axles with 20" wheel hub.
- Pneumatic suspension.
- Two wheels per axle. Disc brakes 430 x 45.
- Ruedas 385/62 R22,5 (continental).
- Aluminium wheel rims with semi-polished finish.
- 2" King-pin.
- Telescopic mechanical legs: 50 ton static load, 24 ton elevated load.
- Lashing rings.
- Electrical installation: 24 V, two 7-pole connections.
- Rear lights with six functions.
- Aluminium rear bumper.
- Mudguards.
- Boxes for fire extinguishers.
- Underrun protection bars.
- Marking according to ADR.

SCHEMATIC DIAGRAM
LNG TANKER LTC58

CS	3-way valve (safety)
VS	Safety valve
VA	Pressure relief valve
ri	Bottom level valve
rs	Top level valve
N	Level
Mv	Vacuum gauge device
Pe	Casing safety device
Tv	Vacuum connection
FG	Gas phase
FL	Liquid phase
VR	Maximum filling valve
V*	Manual valves
VN*	Pneumatic bottom valve

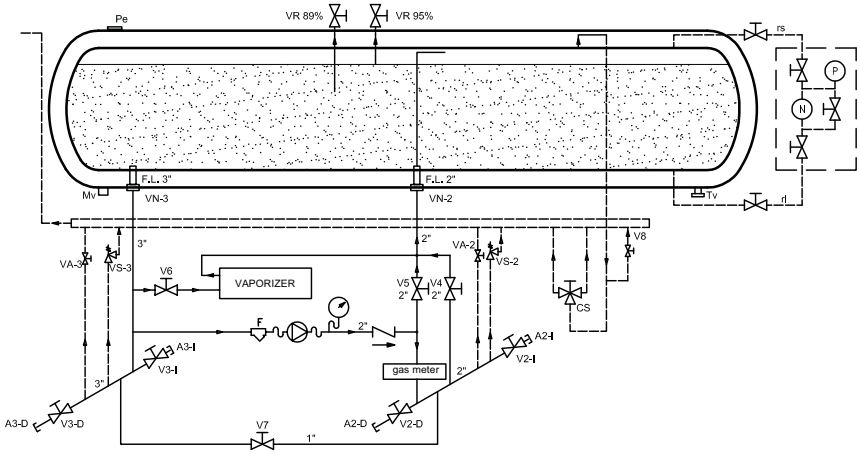

WORLDWIDE PROJECTS

lapesa

Lapesa Grupo Empresarial
Pol. Ind. Malpica - Calle A, Parcela 1-A
50016 ZARAGOZA (España)
Tel.: 976 465 180 / Fax: 976 574 393
e-mail: lapesa@lapesa.es
www.lapesa.com

ISO 9001
BUREAU VERITAS
Certification

lapesa.com

CATLNG-EN-0720-06